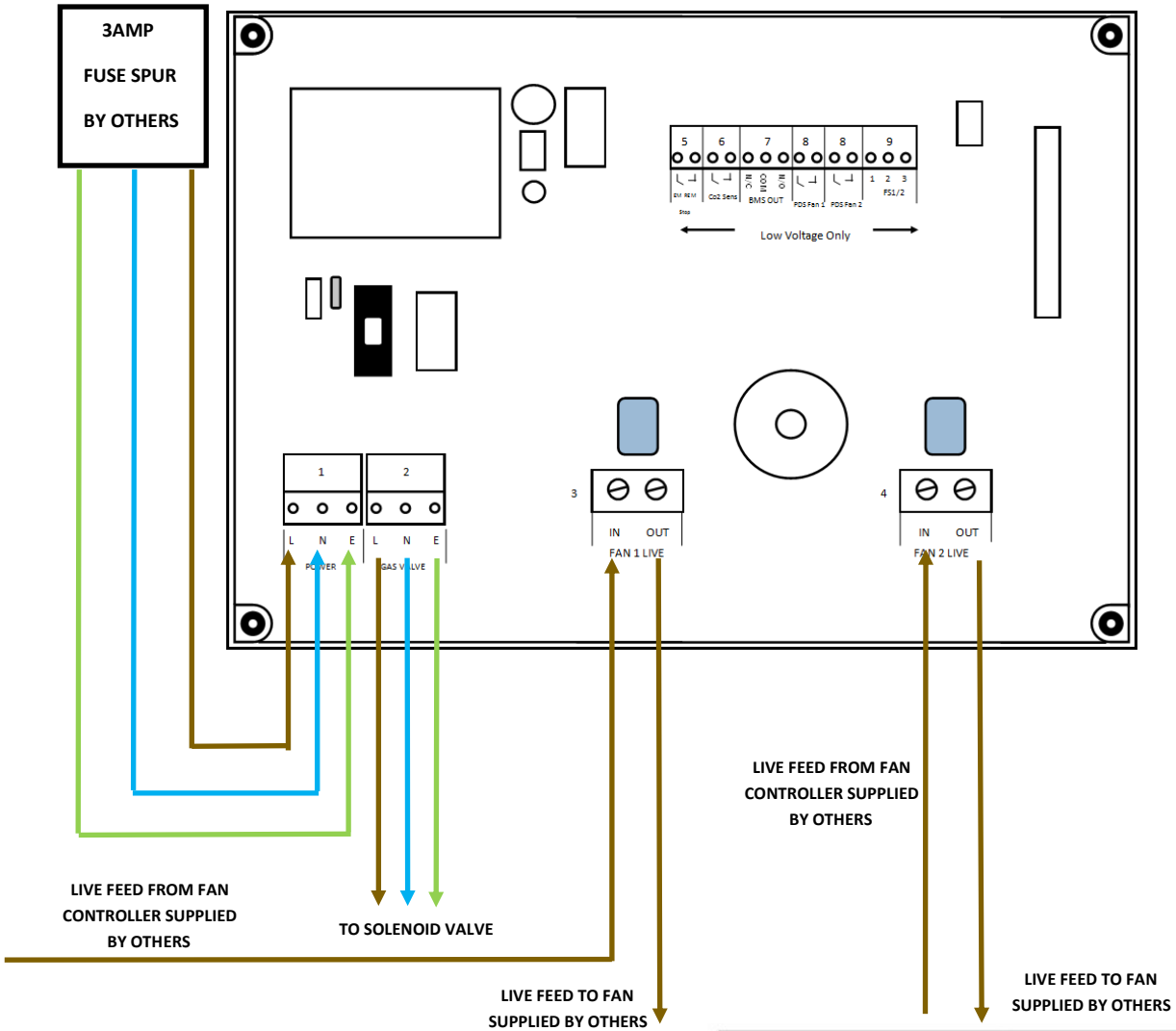

Legend

1) A 230-Volt electrical supply should be supplied to the panel. This should be externally fused at 3 Amps using a fused spur and should be connected to the terminals marked “LNE POWER”.

2) The gas solenoid valve should be powered using the terminal on the Merlin CT1650+ marked “GAS VALVE”.

3/4) If you are monitoring the fan by measuring electrical current going to the fan this terminal(s) should be used. The live feed from the fan controller should be taken to the Merlin CT1650+ and connected to the ‘FAN 1 IN’. The live feed from the ‘FAN 1 OUT’ terminal should then be taken to the fan. If you are interlocking with two fans please repeat the step above for the ‘FAN 2’ terminal.

5) The terminal for remote emergency shut-off buttons is detailed on the circuit board as ‘EM REM STOP’. These connections are linked out as a factory setting. Remote emergency shut-off buttons should be volt free and wired to the Merlin CT1650+ using two-core cable.

6) This terminal can be wired to a CO2 monitor to shut off the system in the event of High CO2 levels. If no CO2 monitor is supplied leave the terminal link in.

7) Terminal connections are available on the circuit board for connections to Building Management Systems. This terminal should be wired using low voltage cable.

8) External current monitors or air pd switches can be wired to these terminals.

9) This terminal switches when the key is turn on and off. This can be linked to a fan switch (panel supplied separately) which can provide power to the fans when the control panel is switched on.

S&S NORTHERN
www.sns-northern.com

Client

Job Title

Drawing Title

All discrepancies between information shown on the drawing and information in the specification to be referred to S&S Northern prior to proceeding.

Copyright in all documents and drawings prepared by S&S Northern and any work executed from these documents and drawings shall unless otherwise agreed, remain the property of S&S Northern.

Amendments

Scale	Date	Drawn
N.T.S.		BT

Merlin CT1650+ | Rev. 1