Merlin CO2-X

Dual Power Carbon Dioxide & Temperature Monitor

Installation & Operation Manual

Please read this manual carefully and retain for future use.

The Merlin CO2-X is designed to monitor carbon dioxide (CO_2) in the air and temperature.

The monitor has a digital traffic light style display indicating the carbon dioxide levels and temperature in the area. When CO_2 gas or temperature reaches alarm state – this device is able to automatically drive ventilation fans reducing CO_2 and/or temperature.

CONTENTS

INSTALLATION 3

Planning 3
Quick Installation Arrangement 3
Typical Positioning 3
Fixing 4
Board Overview 4
Wiring the CO2-X 5
Settings Switch and Board Buttons 7
Settings Menu Explained 8
Factory Set Condition 8
Settings – Optional Configurations 9
Trouble Shooting 10
Specification 10

OPERATION 11

First Power Up 11
Traffic Light Indication 12
Thresholds 12
Screen Saver 13
End of Life Indicator 13
Service & Maintenance 13

IMPORTANT WARNING STATEMENTS 15

Manufacturer's Warranty 15
Installation Details 16

CO2-X FEATURES

- ✓ CO_2 measured and displayed in parts per million (PPM).
- ✓ Temperature can be displayed in degrees Celsius (°C) or Fahrenheit (°F).
- ✓ 0-10V Signal Output progress bar display.
- ✓ Monitor, record and display average CO_2 concentration over 8 hour periods.
- ✓ User friendly settings menu.
- ✓ Pre-alarm and alarm relay output.
- ✓ Fan controller enabled relay output.
- ✓ Dual power 100-240VAC or 12-24VAC or DC inputs.
- ✓ End of Life and Fault notifications for CO_2 sensing element.
- ✓ Automatically switch between ventilation programs when gas is used.
- ✓ Boost, Mute and Wake Up button.

INSTALLATION

Planning

Area of coverage

Consider the coverage required and function of the area. Emphasis should be placed on airflow patterns and correct placement, not perceived detecting ranges. The target gas will only be identified when contact is made with the sensing element itself.

Your monitor should be installed in populated areas that risk high concentrations of CO_2 gas or varied temperatures e.g. educational and government buildings including laboratories and commercial kitchens.

Areas to avoid

Avoid conditions of any other environmental factors that could potentially impede the accuracy and operation of the detectors such as; condensation; vibration; extreme temperatures, pressure, presence of other gases, electromagnetic interference and draft zones.

Take in to account the design of the air flow within the zone area. Avoid conditions such as; condensation; vibration; extreme temperatures and draft zones.

⚠

Multiple monitors may be required to adequately protect property and/or persons.

Quick Installation Arrangement

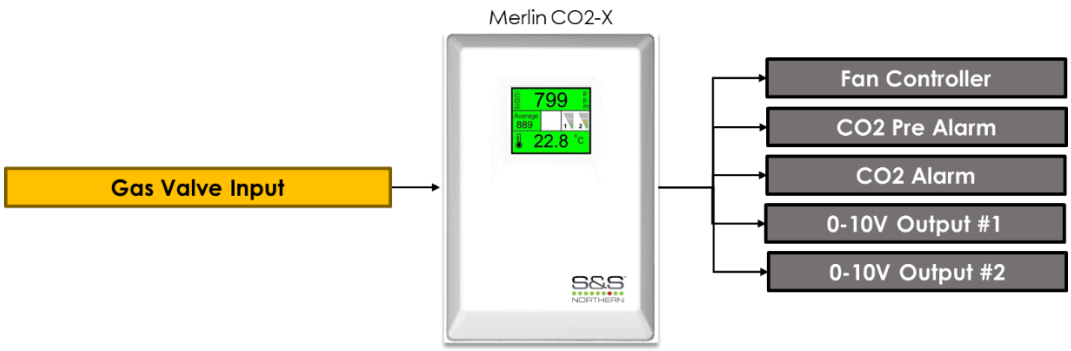

Typical Positioning

Avoid positioning near draft areas (windows and door entrances).
Where possible, monitors must be fixed in such a position as to allow natural air circulation.

Laboratories / Educational buildings	Seated head height
Commercial kitchens	1700mm (5.6ft) from ground level

These recommended heights may vary based on air flow and temperature conditions in addition to the proposed application and location.

Fixing

Unpack all the parts!

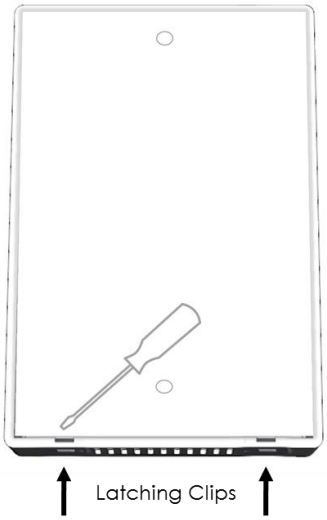

1. Carefully remove the rear cover from the unit by releasing the two latching clips located at the bottom of the case. To do this – use a small flat head screwdriver.
2. Using the rear cover - mark the screw holes to the wall. Ensure the wall surface is flat to prevent base distortion.
3. There are two pre-fractured areas for cable entry provided on the inside of the rear cover which may be cut away as required.
4. After executing the mounting and the connections – replace the rear cover ensuring the two clips are latched.
5. Make a note of the installation date on the label located on the side of the unit.

Board Overview

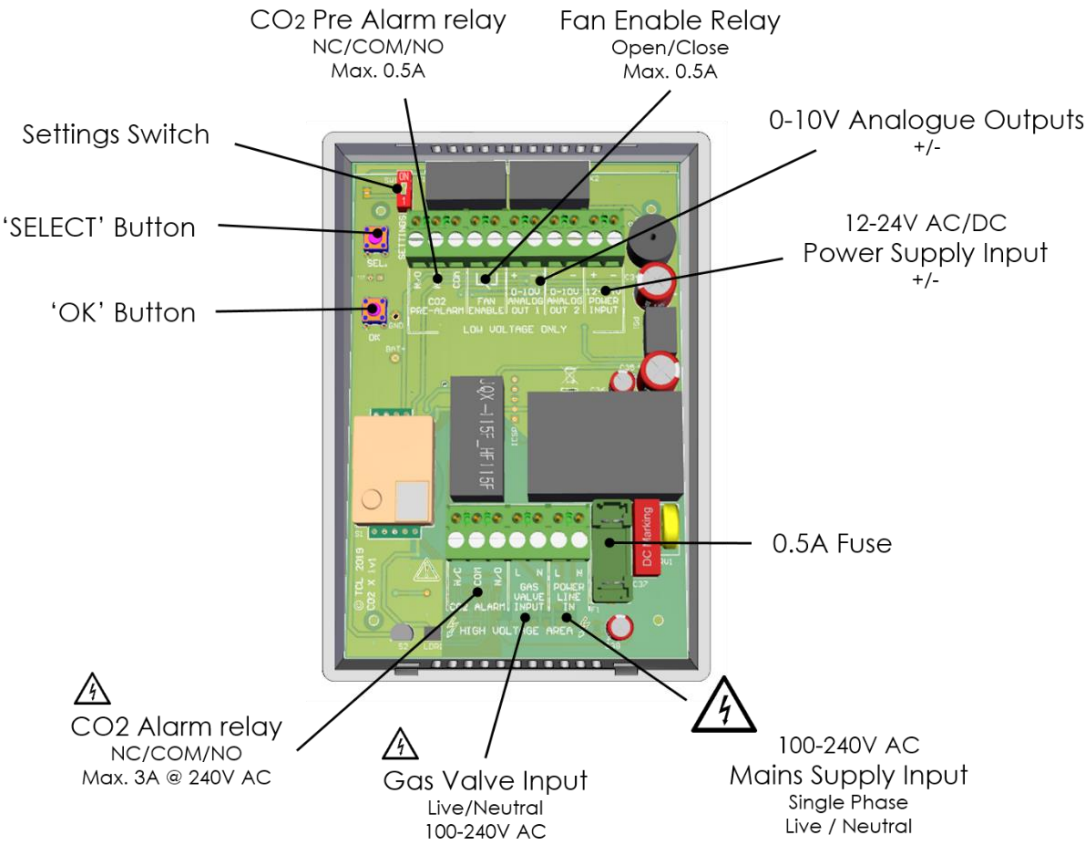

⚠ Do not attempt to remove the Board! This will void any warranty.

Wiring the CO2-X

> ⚠
> Mains supply must be connected by a competent person and according to applicable regulations.

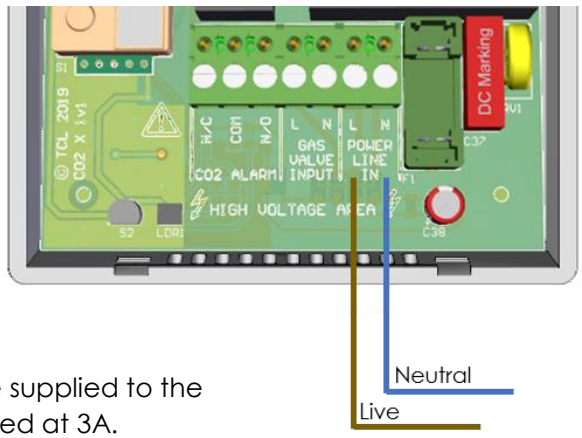

MAINS POWER CONNECTION

100-240V AC Single phase mains power should be supplied to the [POWER/LINE IN] connector (Live/Neutral) and fused at 3A.

The CO2-X can also be powered from 12-24V supply – see [12-24V POWER INPUT].

GAS VALVE INPUT

It is possible for your CO2-X to receive a signal from a gas solenoid valve via Live & Neutral terminals on our merlin panels when wired parallel. To receive a signal you must configure your CO2-X in Natural or Mechanical ventilation mode – *see settings for ventilation types.*

When gas is supplied/in use – the CO2-X will receive a signal from the gas valve and display the [GAS IN USE] message. The CO2-X will configure itself automatically to operate under 'Kitchen ventilation type' mode and its thresholds until the gas supply is turned off – see section 'Settings' for configuration.

> ⚠
> This feature is recommended for teaching areas with gas appliances such as laboratories and food technology rooms.

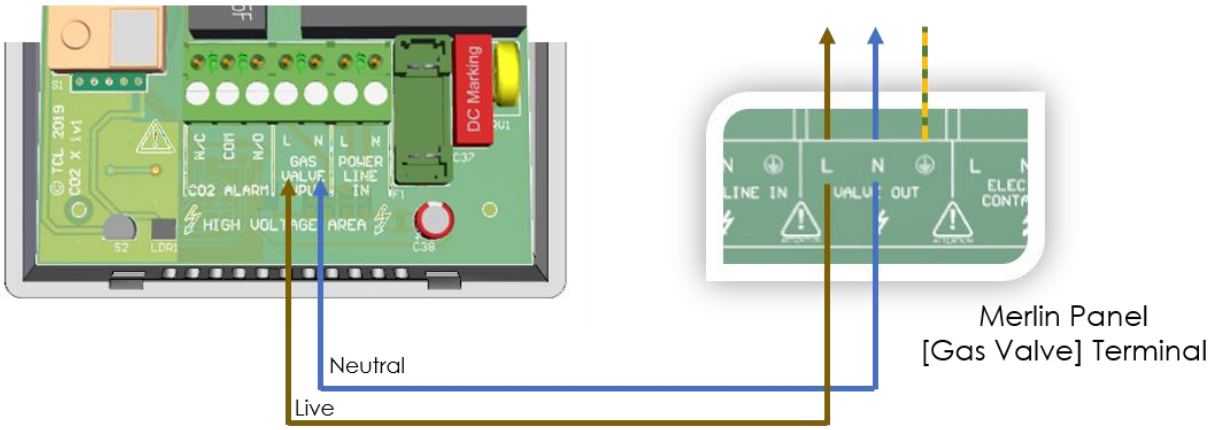

CO2 ALARM

This terminal can also connect to a building management system (BMS) or to a Merlin panel to send an alarm signal.

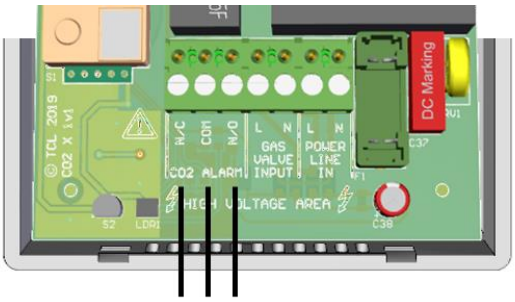

CO2 PRE-ALARM

This relay can send a signal to a Building Management System (BMS) or Merlin panel when CO2 reaches pre-alarm level.

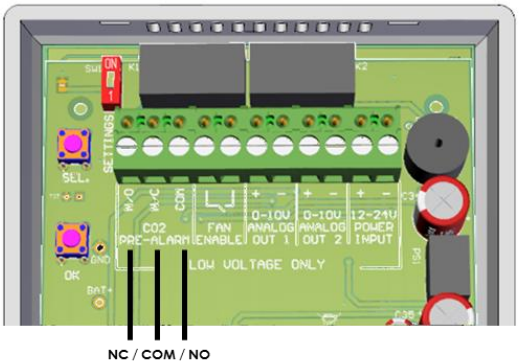

FAN ENABLE

The [FAN ENABLE] relay output can be connected to a fan switch which can energise fans via a signal.

This relay will switch on a fan from the current CO_2 level only, by current temperature only or by the status of both (whichever is greatest) as follows:

N/C: >600ppm / >23°C (73.4°F)
N/O: <550ppm / <22°C (71.6°F)

These levels cannot be altered.

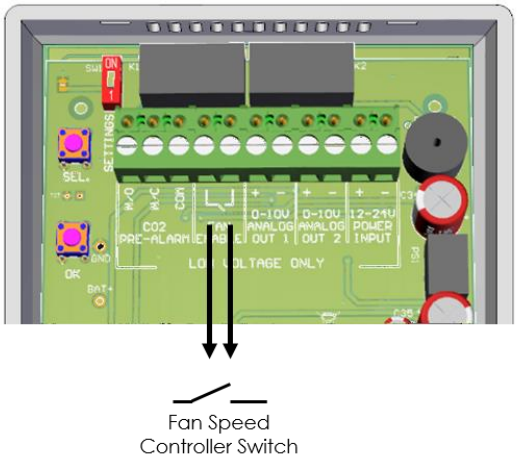

0-10V ANALOGUE OUT 1 & 2

These connections are used to regulate external fan speed controllers (supplied separately).
Connect direct to fan speed controllers or via your Merlin panel [0-10V] terminal if available.

Minimum voltage output can be configured in settings menu from 0-5V.

0-10V output can be driven by the status of current CO_2 level only, by current temperature only or by the status of both levels (whichever is greatest).

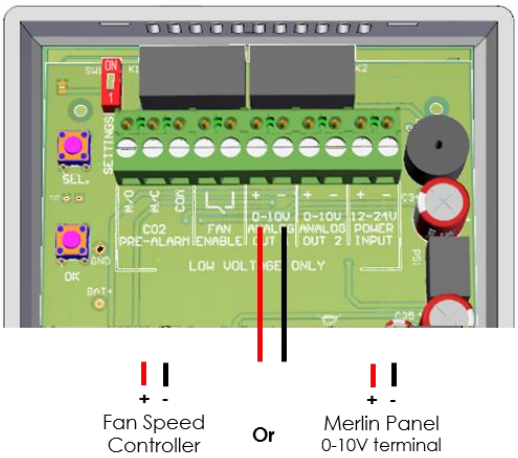

12-24V POWER

To power the CO2-X with 12-24V power – this should be supplied to the [12-24V POWER INPUT] connector (+ / -).

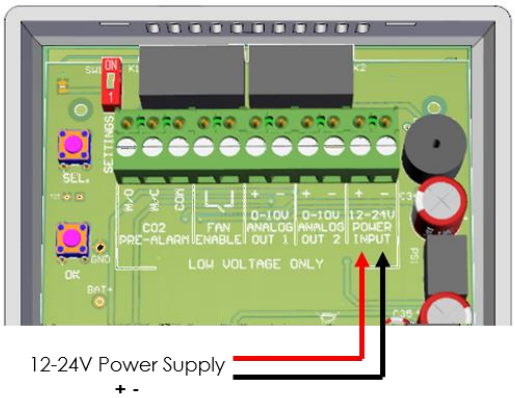

Settings Switch and Board Buttons

There is a [SETTINGS] switch on the CO2-X board. Switch it on to prompt the on-screen menu.

VENT. TYPE	NAT.
MIN. 0-10 OUT 1	1
MIN. 0-10 OUT 2	1
0-10V OUT 1	TEMP.
0-10V OUT 2	CO2

BUZZER	ON
TEMP. UNITS	°C
BOOST (MIN.)	1
FAN ENABLE	CO2
BRIGHTNESS	MED

SCREEN SAVER OFF
FACTORY RESET

Navigate the settings menu using the buttons on the CO2-X board.

[SEL.]
- Scroll through functions (highlighted red).
- Change the desired setting when highlighted.

[OK]
- Highlights setting (red).
- Press to save desired setting.

When changes have been made – turn the SETTINGS switch OFF

Settings Menu Explained

VENT. TYPE

- Natural – (NAT.) Recommended for buildings without mechanical ventilation.
- Mechanical – (MECH.) Recommended for buildings with mechanical ventilation.
- Kitchen – (KITCH.) Recommended for kitchen environments.

MIN 0-10 OUT 1 & 2

Minimum voltage output from 0-10V Analogue out 1 & 2 terminals.

0-10V OUT 1 & 2

0-10V output can be driven by current CO_2 ppm level only, by current temperature only or by the status of both – whichever is the greatest.

BUZZER

The buzzer will operate as selected in KITCHEN ventilation type only.

You can select the buzzer to beep three times every 15 seconds, every 10 minutes or not at all when the alarm status is reached.

TEMP. UNITS

Select between measuring the temperature in degrees Celsius or Fahrenheit.

BOOST (MIN.)

Analogue outputs will run at optimum capacity (10V) for time specified.

Select from 1 – 10 minutes. Outputs return to normal after the specified boost time.

FAN ENABLE

This relay will switch on a fan from the current CO_2 level only, by current temperature only or by the status of both – whichever is the greatest.

BRIGHTNESS

There are three (3) levels of screen backlight brightness: LOW, MED and HIGH.

SCREEN SAVER

If ON is selected, the display will remain off and wake up at pre-alarm/ alarm status. To wake up the screen for ten seconds press the touch button. If OFF is selected the display will remain on.

FACTORY RESET

Restores all settings to factory set condition.

Factory Set Condition

VENT. TYPE	**NAT.**	**BUZZER**	**ON**	**SCREEN SAVER**	**OFF**
MIN 0-10 OUT 1	**1**	**TEMP. UNITS**	**°C**		
MIN 0-10 OUT 2	**1**	**BOOST (MIN.)**	**1**		
0-10V OUT 1	**TEMP**	**FAN ENABLE**	**CO2**		
0-10V OUT 2	**CO2**	**BRIGHTNESS**	**MED**	**FACTORY RESET**	

Settings – Optional Configurations

VENT. TYPE

NAT. - Natural Ventilation Type (Default)

Green: <1300ppm <23 °C/ 73.4°F
Yellow: ≥1300ppm >23 °C/ 73.4°F
Red: ≥1500ppm >25 °C/ 77.0°F
CO_2 Pre-alarm relay switch: 1300ppm
CO_2 Alarm relay switch: 1500ppm

0-10V Analogue Output: Linear Progression.
- Min output (1-5V) from 600ppm 23 °C/ 73.4°F
- Max output (10V) from 1500ppm 27 °C/ 80.6°F

Boost from: 400 - 1499ppm 0°C/32°F – 26.9°C/80.4°F

MECH. - Mechanical Ventilation Type

Green: <800ppm <23 °C/ 73.4°F
Yellow: ≥800ppm >23 °C/ 73.4°F
Red: ≥1000ppm >25 °C/ 77.0°F
CO_2 Pre-alarm relay switch: 800ppm
CO_2 Alarm relay switch: 1000ppm

0-10V Analogue Output: Linear Progression.
- Min output (1-5V) from 600ppm 23 °C/ 73.4°F
- Max output (10V) from 1000ppm 27 °C/ 80.6°F

Boost from: 400 - 999ppm 0°C/32°F – 26.9°C/80.4°F

KITCH. – Kitchen/Gas in Use Ventilation Type

Green: <1500ppm <23 °C/ 73.4°F
Yellow: ≥1500ppm >23 °C/ 73.4°F
Red: ≥2800ppm >25 °C/ 77.0°F
CO_2 Pre-alarm relay switch: 1000ppm
CO_2 Alarm relay switch: 4500ppm

0-10V Analogue Output: Linear Progression.
- Min output (1-5V) from 600ppm 23 °C/ 73.4°F
- Max output (10V) from 2800ppm 27 °C/ 80.6°F

Boost from: 400 - 2799ppm 0°C/32°F – 26.9°C/80.4°F
Buzzer alarm/ Mute from: >2800ppm

MIN 0-10 OUT 1
Analogue output minimum voltage.
Select: **0, 1, 2, 3, 4, 5** volt/s

0-10V OUT 1
0-10V analogue output energised by.
Select: **CO2 / TEMPERATURE / DUAL**

BUZZER
Kitchen Vent Type Mode
CO_2 >2800ppm Only. Select:
ON – 3 beeps every 15 seconds
10MINS – 3 beeps every 10 minutes
OFF

BOOST (MIN.)
Analogue outputs at optimum voltage (10V) for number of minutes. Boost can only be activated if either analogue outputs is set to CO2 or DUAL mode only.
Select: **1, 2, 3, 4, 5, 6, 7, 8, 9, 10** minute/s

BRIGHTNESS
Brightness of the screen display. Select:
LOW - low
MED - medium
HIGH - high

MIN 0-10 OUT 2
Analogue output minimum voltage.
Select: **0, 1, 2, 3, 4, 5** volt/s

0-10V OUT 2
0-10V analogue output energised by.
Select: **CO2 / TEMPERATURE / DUAL**

TEMP. UNITS
Temperature measurement
Select: **°C** Celsius / **°F** Fahrenheit

FAN ENABLE
Fan switch is energised by. Select:
CO2 (ON >600ppm OFF <550ppm)
TEMPERATURE (ON >23°C OFF <22°C)
DUAL (Whichever is greatest)

SCREEN SAVER
ON – screen will switch off until temperature or CO2 levels reach pre alarm/ alarm status.
OFF – screen constantly on.

Trouble Shooting

Fault.	Possible Cause/Correction.
Monitor not responding.	o Incorrect wiring.
CO2 Error message on screen	o CO_2 sensor element knocked or damaged.
End of Life message on screen	o Replace unit – contact your supplier.

Specification

Product:	Dual Power Carbon Dioxide & Temperature Monitor
Model:	CO2-X
Visual Indicators	CO_2 gas level / Temperature level / Measurement value / Boost / End of life / Sensor fault / Gas in use / Mute / Average CO_2 level
Display	1.8" TFT – Thin Film Transistor
Screen Brightness	Low, Medium, High
Initial Stabilisation Time	One (1) Minute
Power Supply	100-240V AC 50-60Hz (Max 2.16VA without load) or 12-24V AC/ DC (25V AC/DC Max)
Gas Valve Input	100-240V AC
CO2 Pre Alarm Relay Output	Max 0.5A Signal
CO2 Alarm Relay	Max 3A @ 240V
Fan Enable Relay Output	Max 0.5A Signal
Consumption	2.16 W Max
Internal Fuse	0.5A / 250V AC
Operating Temp	0 – 40°C / 0-95%RH Non-Condensing
Alarm (Buzzer) Sound (dB)	65 dB (300mm distance in quiet conditions)
CO2 Sensor	
Sensor Type	NDIR. Intelligent Infrared CO2 Module. ABC Logic Auto Calibration
Measuring Range	400-5000ppm
Accuracy @ 25°C / 77°F	± 100ppm
Gas Sensor Signal Update	Every three seconds
CO2 Average Signal Update	Every ten minutes
Expected Life	10 Years
Temperature Sensor	
Sensor Type	Linear Active Thermistor Integrated Circuit
Measuring Range	0-95 °C / 0-203°F
Accuracy @ 25°C / 77°F	± 2°C Max
Resolution	0.1 °C/°F
Dimensions (H x W x D)	140 x 95 x 30mm / 5.5 x 3.74 x 1.18"
Net Weight	256g / 9.03oz

OPERATION

First Power Up

On connecting power, the CO2-X monitor enters 'sensor stabilisation' phase for approximately 60 seconds – during this period the screen will display an 'initialisation' message indicating that the device is not yet ready for operation. After the stabilisation period, your monitor will display:

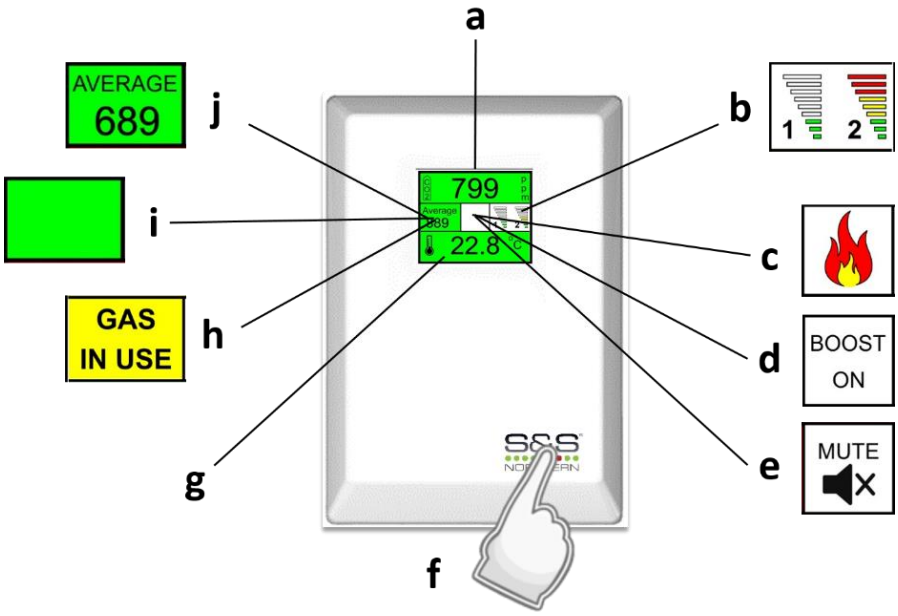

a. CARBON DIOXIDE READING. Current CO_2 gas level in parts per million (ppm).

b. 0-10V ANALOGUE OUTPUT PROGRESS BARS. 0-10V analogue outputs 1 and 2.

c. FLAME ICON appears only when the CO2-X receives a signal from a gas valve and gas supply is open/on and set to Natural or Mechanical Ventilation Type mode.

d. BOOST ON message appears when BOOST is activated - press and hold the touch button (f) for three (3) seconds. The analogue outputs will run at optimum voltage (10V) for a pre-set number of minutes. Boost can only be activated if either analogue outputs is set to CO2 or DUAL mode only.

e. MUTE message appears when the touch button (f) is pressed. The audible alarm buzzer must be set to on or every 10 minutes and can only occur when gas is in use or KITCH. Ventilation mode is selected and when CO_2 levels rise above 2800ppm.

f. TOUCH BUTTON (the '&') is used to activate 'Boost' or 'Mute' dependant on the status and also to exit screen saver to view the screen for 10 seconds.

g. TEMPERATURE READING. Current temperature in degrees Celsius or Fahrenheit. The temperature will increase its accuracy over a 30 minute period upon power up.

h. GAS IN USE MESSAGE appears only when the CO2-X receives a signal from a gas valve and gas supply is open/on. When the gas valve is closed, this message will not be displayed. Appears with Flame icon.

i. BLANK BOX. When in Natural or Mechanical mode, this box is left blank when the current CO_2 reading is below 550ppm. In Kitchen ventilation mode – this is constantly left blank.

j. AVERAGE CO_2 CALCULATION. The monitor will display the average CO_2 reading over periods of 8 hours and appear only when current CO_2 levels reach or exceed 600ppm in Natural or Mechanical ventilation type modes only.

Traffic Light Indication

Your CO2-X displays both current CO_2 and temperature levels in a traffic light style indication.

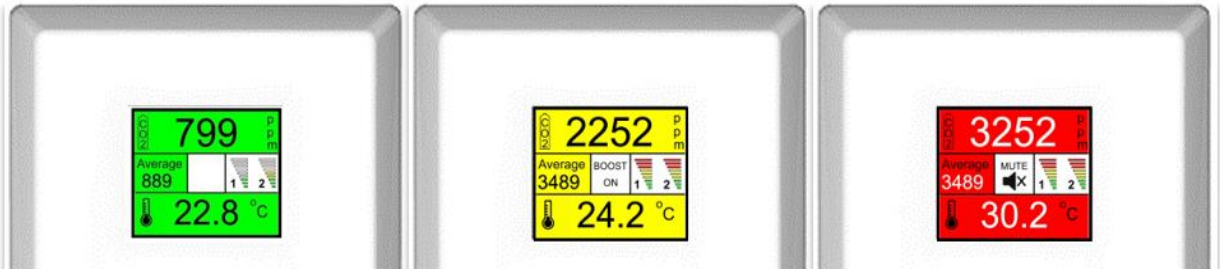

SAFE
Safe CO_2 or Temperature levels will be displayed **GREEN.**

ATTENTION!
Low CO_2 or Temperature levels will be displayed **YELLOW.**

DANGER!
Dangerous CO2 or high temperature levels will be displayed **RED.**

Thresholds

The thresholds for CO_2 will depend upon how your CO2-X was configured in the settings menu. There is no audio alarm for high temperatures.

Natural Ventilation Type (Factory set condition)

Green: <1300ppm / <23 °C/ 73.4°F
Yellow: ≥1300ppm / >23 °C/ 73.4°F
Red: ≥1500ppm / >25 °C/ 77.0°F

0-10V Output progress bars:
- Min (1-5V) from 600ppm. 23 °C/ 73.4°F
- Max (10V) from 1500ppm. 27 °C/ 80.6°F

Boost from: 400 - 1499ppm. 0°C/32°F – 26.9°C/80.4°F

Mechanical Ventilation Type

Green: <800ppm / <23 °C/ 73.4°F
Yellow: ≥800ppm / >23 °C/ 73.4°F
Red: ≥1000ppm / >25 °C/ 77.0°F

0-10V Output progress bars:
- Min (1-5V) from 600ppm. 23 °C/ 73.4°F
- Max (10V) from 1000ppm. 27 °C/ 80.6°F

Boost from: 400 - 999ppm. 0°C/32°F – 26.9°C/80.4°F

Kitchen Ventilation Type (Set condition when gas valve signal supplied)

Green: <1500ppm / <23 °C/ 73.4°F
Yellow: ≥1500ppm / >23 °C/ 73.4°F
Red: ≥2800ppm / >25 °C/ 77.0°F

0-10V Output progress bars:
- Min (1-5V) from 600ppm. 23 °C/ 73.4°F
- Max (10V) from 2800ppm. 27 °C/ 80.6°F

Boost from: 400 - 2799ppm. 0°C/32°F – 26.9°C/80.4°F
Mute from: 2800ppm for 30mins when Gas Supply On

Screen Saver

If the screen saver is set to 'ON' (see settings), the CO2-X monitor screen will switch off when both CO_2 and Temperature levels are at safe levels (green). No readings or messages will be visible during this time.

The screen will exit screen saver mode when either the CO_2 or Temperature changes status (yellow or red). To manually exit screen saver press 'Touch' button - the screen will remain visible for 10 seconds.

End of Life Indicator

This message indicates that the CO2-X monitor has reached its expected operational lifecycle. No gas or temperature levels will be displayed. The expected lifetime is 10 years.

Contact your supplier and replace the unit immediately.

⚠
The expected lifecycle of 10 years may vary depending on environmental conditions.

Service & Maintenance

Keep your detector in good working order follow these basic principles;

- DO carefully remove any accumulated dust from the outer enclosure once a month.
- NEVER use detergents or solvents to clean your device – this may permenantly or temporarily damage the gas sensing elements.
- NEVER spray air fresheners, hair spray, paint or other aerosols near the device.
- NEVER paint the device. Paint will seal vents and interfere with the device.

⚠
High concentrations of alcohol found in many products may damage, deteriorate or affect the gas sensing elements – such as; wine; deodorants; stain removers; thinners etc.

Our CO_2 monitors are designed to automatically recalibrate using background CO_2 levels. For maintenance purposes, our monitors should be exposed to fresh air frequently to aid with this recalibration procedure. Coinciding bump tests on a regular basis are also recommended to ensure ongoing accuracy. Inaccuracies that do not resolve over a 24 hour period may require temporary removal of the monitor, from site, for an extended exposure to fresh air.

NOTES

⚠ IMPORTANT WARNING STATEMENTS

Please take the time to thoroughly read this user's guide which should be retained for future reference.

The expected lifetime of the gas sensor elements is 10 years upon initial power up.

The device will display a message to indicate its end of life and should immediately be replaced.

It is recommended that this device be commissioned upon installation and serviced annually.

Do not apply lighter gas or other aerosols to the device – this will cause extreme damage.

High concentrations of alcohol found in many products may damage, deteriorate or affect the gas sensing elements.

This device is designed to monitor carbon dioxide gas and temperature only. It is NOT designed to detect smoke, fire or other gases and should NOT be used as such.

Never ignore your device when in alarm.

This device requires a continual supply of electrical power – it will not work without power.

This device should not be used to substitute proper installation, use and/or maintenance of fuel burning appliances including appropriate ventilation and exhaust systems.

This device does not prevent dangerous gasses from occurring or accumulating.

Actuation of your alarm indicates the presence of dangerous levels of CO_2 or high temperature.

This unit may not fully safeguard individuals with specific medical conditions. If in doubt, consult a doctor/physician.

Your product should reach you in perfect condition, if you suspect it is damaged, contact your supplier.

Manufacturer's Warranty

3 Year Warranty

Warranty coverage:

The manufacturer warrants to the original consumer purchaser, that this product will be free of defects in material and workmanship for a period of three (3) years from date of purchase. The manufacturer's liability hereunder is limited to replacement of the product with repaired product at the discretion of the manufacture. This warranty is void if the product has been damaged by accident, unreasonable use, neglect, tampering or other causes not arising from defects in material or workmanship. This warranty extends to the original consumer purchaser of the product only.

Warranty disclaimers:

Any implied warranties arising out of this sale, including but not limited to the implied warranties of description, merchantability and intended operational purpose, are limited in duration to the above warranty period. In no event shall the manufacturer be liable for loss of use of this product or for any indirect, special, incidental or consequential damages, or costs, or expenses incurred by the consumer or any other user of this product, whether due to a breach of contract, negligence, strict liability in tort or otherwise. The manufacturer shall have no liability for any personal injury, property damage or any special, incidental, contingent or consequential damage of any kind resulting from gas leakage, fire or explosion. This warranty does not affect your statutory rights.

Warranty Performance:

During the above warranty period, your product will be replaced with a comparable product if the defective product is returned together with proof of purchase date. The replacement product will be in warranty for the remainder of the original warranty period or for six months – whichever is the greatest.

Information on waste disposal for consumers of electrical & electronic equipment.

When this product has reached the end of its life it must be treated as Waste Electrical & Electronics Equipment (WEEE). Any WEEE marked products must not be mixed with general household waste, but kept separate for the treatment, recovery and recycling of the materials used. Please contact your supplier or local authority for details of recycling schemes in your area.

Installation Details

Please pass this manual to the system owner / user.

Date of Installation:	
Installation Location:	
Organisation:	
Stamp/ Signature of the installer:	
Replacement Date:	

S&S Northern Head Office
Tel: +44(0) 1257 470 983
Fax: +44(0) 1257 471 937
www.snsnorthern.com
info@snsnorthern.com

South East Division
Tel: +44(0) 1702 291 725
Fax: +44(0) 1702 299 148
south@snsnorthern.com

S&S Northern is the owner of this document and reserves all rights of modification without prior notice.